1968 FORD

Thunderbird

SHOP MANUAL
SUPPLEMENT

1968 Ford Thunderbird Shop Manual EAN: 978-1-60371-018-3

ISBN: 1-60371-018-3

Forel Publishing Company, LLC 3999
Peregrine Ridge Ct. Woodbridge, VA

Distributed by FordThunderbirdShopManual.com

Note from the Editor

This product was created from the original Ford Motor Company's publication. Every effort has been made to use the original scanned images, however, due to the condition of the material; some pages have been modified to remove imperfections.

Disclaimer

Although every effort was made to ensure the accuracy of this book, no representations or warranties of any kind are made concerning the accuracy, completeness or suitability of the information, either expressed or implied. As a result, the information contained within this book should be used as general information only. The author and Forel Publishing Company, LLC shall have neither liability nor responsibility to any person or entity with respect to any loss or damage caused, or alleged to be caused, directly or indirectly by the information contained in this book. Further, the publisher and author are not engaged in rendering legal or other professional services. If legal, mechanical, electrical, or other expert assistance is required, the services of a competent professional should be sought.

1968

FORD THUNDERBIRD

SHOP MANUAL SUPPLEMENT

GROUP INDEX

VEHICLE IDENTIFICATION 1
BRAKES 2
SUSPENSION, STEERING, WHEELS AND TIRES 3
REAR AXLE 4
DRIVE SHAFT AND CLUTCH 5
MANUAL SHIFT TRANSMISSION (Not Applicable) 6
AUTOMATIC TRANSMISSION 7
ENGINE 8
IGNITION SYSTEM 9
FUEL SYSTEM 10
COOLING SYSTEM 11
EXHAUST SYSTEM 12
CHARGING SYSTEM 13
STARTING SYSTEM 14
LIGHTING SYSTEM, HORNS AND INSTRUMENTS 15
VENTILATING, HEATING AND ACCESSORIES 16
BODY, DOORS AND WINDOWS 17
TRIM, SEATS AND CONVERTIBLE TOP 18
SPECIFICATIONS 19

FIRST PRINTING–FEBRUARY, 1968

FOREWORD

This shop manual supplement, when used with the 1967 shop manual, provides the Service Technician with information for the proper servicing of the 1968 Thunderbird.

All testing, adjustment and repair procedures that are new for 1968, as well as specifications, and recommended special tools, are included in this manual.

The maintenance schedule and procedures for maintenance operations are published in the 1968 Passenger Car Maintenance and Lubrication Manual.

The descriptions and specifications in this manual were in effect at the time this manual was approved for printing. Ford Motor Company reserves the right to discontinue models at any time, or change specifications or design, without notice and without incurring obligation.

Ford SERVICE PUBLICATIONS

Vehicle Identification

GROUP 1

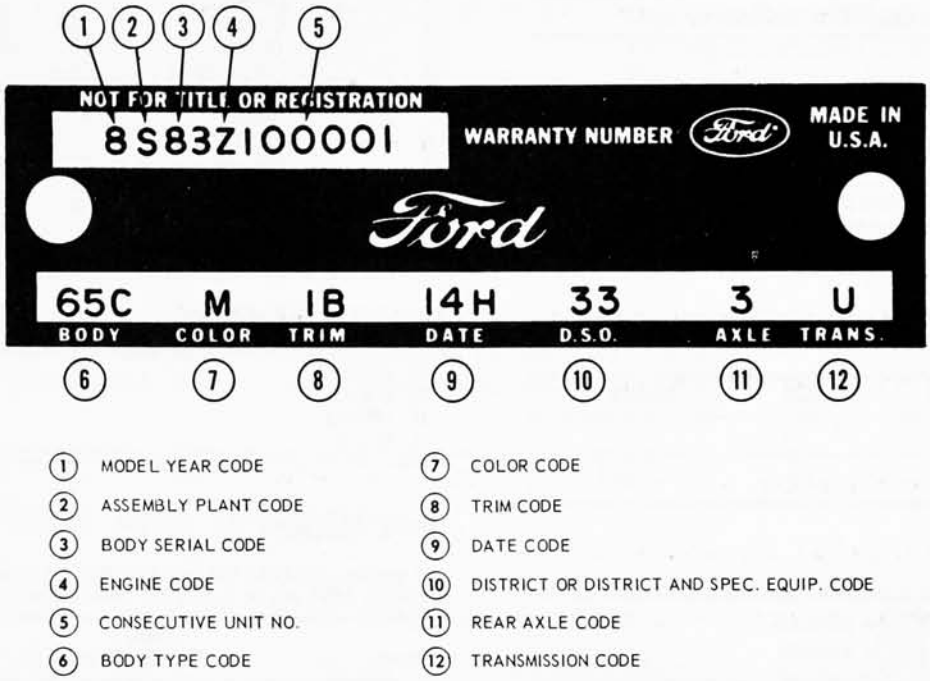

Fig. 1—Warranty Plate—Thunderbird

N1588-B

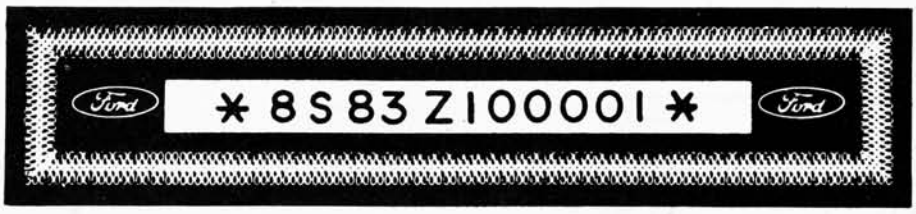

Fig. 2—Thunderbird Vehicle Identification Number (VIN) Tab

N1699-A

VEHICLE WARRANTY NUMBER

The vehicle warranty number is the first line of numbers and letters appearing on the Warranty Plate (Fig. 1). The Warranty Plate is riveted to the left front door lock face panel. The first number indicates the model year. The letter following the model year number indicates the manufacturing assembly plant. The next two numbers designate the Body Serial Code followed by a letter expressing the Engine Code. The group of six digits remaining on the first line indicate the Consecutive Unit Number.

VEHICLE DATA

The vehicle data appears on the second or lower line on the Warranty Plate. The first two numbers and a letter identify the Body Style. A letter or a number appears next indicating the Exterior Paint Color followed by a number-letter combination designating the Interior Trim. To the right of this Code appears the Date Code indicating the date the car was manufactured. A two digit number next designates the district in which the car was ordered and may appear in conjunction with a Domestic Special Order or Foreign Special Order number when applicable. The final two spaces indicate the Rear Axle Ratio (letters for regular axles, numbers for locking-types) and the Transmission type (numbers for manual, letters for automatic).

OFFICIAL VEHICLE IDENTIFICATION NUMBER

The Official Vehicle Identification Number (VIN) will be stamped on an aluminum tab that will be riveted to the instrument panel close to the windshield on the passenger side of the car and will be visible from outside (Fig. 2).

MODEL YEAR CODE

The number 8 designates 1968

ASSEMBLY PLANT CODES

Code Letter		Code Letter	
A	Atlanta	L	Michigan Truck
B	Oakville (Canada)	N	Norfolk
C	Ontario Truck	P	Twin Cities
D	Dallas	R	San Jose
E	Mahwah	S	Pilot Plant
F	Dearborn	T	Metuchen
G	Chicago	U	Louisville
H	Lorain	W	Wayne
J	Los Angeles	X	St. Thomas
K	Kansas City	Y	Wixom
		Z	St. Louis

BODY SERIAL AND STYLE CODES

The two-digit numeral which follows the assembly plant code identifies the body series. This two-digit number is used in conjunction with the Body Style Code, in the Vehicle Data, which consists of a two-digit number with a letter suffix. The following chart lists the Body Serial Codes, Body Style Codes and the model.

CONSECUTIVE UNIT NUMBER

Each model year, each assembly plant begins production with number 100001 and continues on for each unit built.

ENGINE CODES

CODE	TYPE
N	8 Cyl. 429 Cu. In. (4V)

TRANSMISSION CODE

CODE	TYPE
U	C6 Dual Range Automatic

REAR AXLE RATIO CODES

A number designates a conventional axle, while a letter designates a locking differential.

CODE	RATIO	CODE	RATIO
0	2.50:1	—	—
3	2.80:1	C	2.80:1
5	3.00:1	E	3.00:1

THUNDERBIRD

Body Serial Code	Body Style Code	Body Type
83	65C	2-Door Hardtop
84	65D	2-Door Landau
87	57C	4-Door Landau

EXTERIOR PAINT COLOR CODES

Code	"M" Spec. No.	Color
A	1724-A	Black
B	3059-A	Maroon
E	2045-A	Med. Beige Met.
H	2067-A	Diamond Green
J	3080-A	Dk. Aqua Met.
L	3060-A	Dk. Green
M	1619-A	White
O	2040-A	Lt. Green
N	921-A	Diamond Blue
P	2065-A	Pewter Met.
Q	1624-A	Med. Blue Met.
R	3067-A	Dk. Green Met.
T	2008-A	Red
U	1070-A	Med. Aqua Met.
V	3062-A	Lt. Blue
W	3120-A	Yellow
X	3061-A	Dk. Blue Met.
Y	3073-A	Med. Gold Met.
Z	2044-A	Dk. Gray Met.
6	1631-A	Lt. Beige

DISTRICT CODES (DSO)

Units built on a Domestic Special Order, Foreign Special Order, or other special orders will have the complete order number in this space. Also to appear in this space is the two-digit code number of the District which ordered the unit. If the unit is a regular production unit, only the District code number will appear.

Code	District	Code	District
11	Boston	51	Denver
13	New York	52	Des Moines
15	Newark	53	Kansas City
16	Philadelphia	54	Omaha
17	Washington	55	St. Louis
21	Atlanta	61	Dallas
22	Charlotte	62	Houston
24	Jacksonville	63	Memphis
25	Richmond	64	New Orleans
27	Cincinnati	65	Oklahoma City
28	Louisville	71	Los Angeles
32	Cleveland	72	San Jose
33	Detroit	73	Salt Lake City
34	Indianapolis	74	Seattle
35	Lansing	75	Phoenix
37	Buffalo	81	Ford of Canada
38	Pittsburgh	83	Government
41	Chicago	84	Home Office Reserve
42	Fargo	85	American Red Cross
43	Milwaukee	89	Transportation Services
44	Twin Cities	90-99	Export
45	Davenport		

FORD OF CANADA

B1 Central	B4 Midwestern
B2 Eastern	B6 Western
B3 Atlantic	B7 Pacific
I1 thru I7	Export

DATE CODES

A number signifying the date precedes the month code letter. A second-year code letter will be used if the model exceeds 12 months.

Month	Code First Year	Code Second Year
January	A	N
February	B	P
March	C	Q
April	D	R
May	E	S
June	F	T
July	G	U
August	H	V
September	J	W
October	K	X
November	L	Y
December	M	Z

INTERIOR TRIM SCHEMES

Code	Trim Scheme
1A	Black Cloth and Black Vinyl
1B	Dk. Blue Cloth and Dk. Blue Vinyl
1D	Dk. Red Cloth and Dk. Red Vinyl
1G	Dk. Ivy Gold Cloth and Dk. Ivy Gold Vinyl
1K	Lt. Aqua Cloth and Lt. Aqua Vinyl
1Y	Lt. Nugget Gold Cloth and Lt. Nugget Gold Vinyl
2A	Black Vinyl
2B	Dk. Blue Vinyl
2D	Dk. Red Vinyl
2F	Med. Saddle Vinyl
2G	Dk. Ivy Gold Vinyl
2K	Lt. Aqua Vinyl
2U	Pastel Parchment Vinyl
2Y	Lt. Nugget Gold Vinyl
3A	Black Cloth and Black Vinyl
3B	Dk. Blue Cloth and Dk. Blue Vinyl
3D	Dk. Red Cloth and Dk. Red Vinyl
3G	Dk. Ivy Gold Cloth and Dk. Ivy Gold Vinyl
3K	Lt. Aqua Cloth and Lt. Aqua Vinyl
3Y	Lt. Nugget Gold Cloth and Lt. Nugget Gold Vinyl
4A	Black Vinyl
4B	Dk. Blue Vinyl
4F	Med. Saddle Vinyl
4U	Pastel Parchment Vinyl
4Y	Lt. Nugget Gold Vinyl
8A	Black Leather
8F	Med. Saddle Leather

Brakes

GROUP 2

Section	Page
1 Description and Operation	2-1
2 Cleaning and Inspection	2-2
3 In-Vehicle Adjustments and Repairs	2-3
Disc Brake Shoe and Lining Replacement	2-3
Disc Brake Caliper Assembly	2-4
Front Wheel Hub and Rotor Assembly—Disc Brakes	2-4
Disc Brake Rotor Splash Shield	2-5
Parking Brake Linkage Adjustment	2-5
Pressure Differential Valve Assembly	2-5
4 Major Repair Operations	2-6
Disc Brake Caliper	2-6

The information contained in this manual covers features which are new in the 1968 Thunderbird. For service procedures covering rear drum brakes as well as other brake components, refer to the 1967 Thunderbird Shop Manual.

1 DESCRIPTION AND OPERATION

DISC BRAKES

Disc brakes are standard equipment for the front wheels. The rear hydraulic brake system employs single anchor, internal expanding and self-adjusting drum brake assemblies.

A vacuum booster is also standard equipment.

The master cylinder converts physical force from the brake pedal and the booster into hydraulic pressure against the piston in each caliper (disc brakes) and the wheel cylinders (rear drum brakes). The pistons in turn convert hydraulic pressure back into physical force at the brake shoes.

RELATION AND FUNCTION OF COMPONENT PARTS

The disc brake is a floating caliper, single piston, ventilated disc-type, actuated by a hydraulic system (Fig. 1).

The caliper assembly is made up of a floating caliper assembly and an anchor plate. The anchor plate is bolted to the wheel spindle arm by two bolts. The floating caliper is attached to the anchor plate through two flexible steel stabilizers. The floating caliper slides on two locating pins which also attach to the stabilizers.

A single hydraulic piston is fitted into a bore in the inner portion of the caliper housing (Fig. 2). A square section seal is fitted into an annular groove in the caliper bore and a rubber boot is used to seal the piston and caliper bore against road splash contamination. The rubber piston seal returns the piston to the released position when the hydraulic pressure is released.

The inboard and outboard shoe and lining assemblies are mounted in two different ways. The outboard shoe and lining is fixed to the floating caliper and is retained by two pins and spring clips. The inboard shoe and lining rests on the anchor plate abutments and is retained by two spring clips (Fig. 5). The shoe and lining

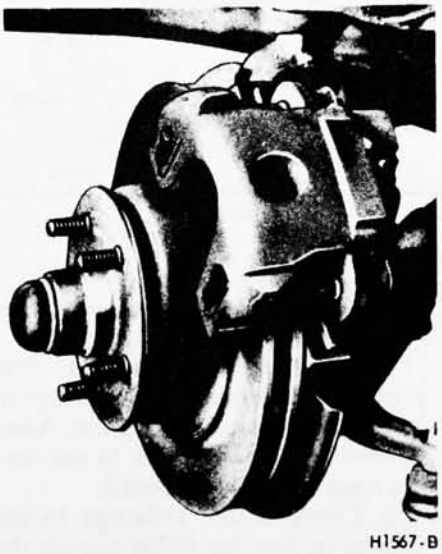

Fig. 1—Disc Brake Assembly

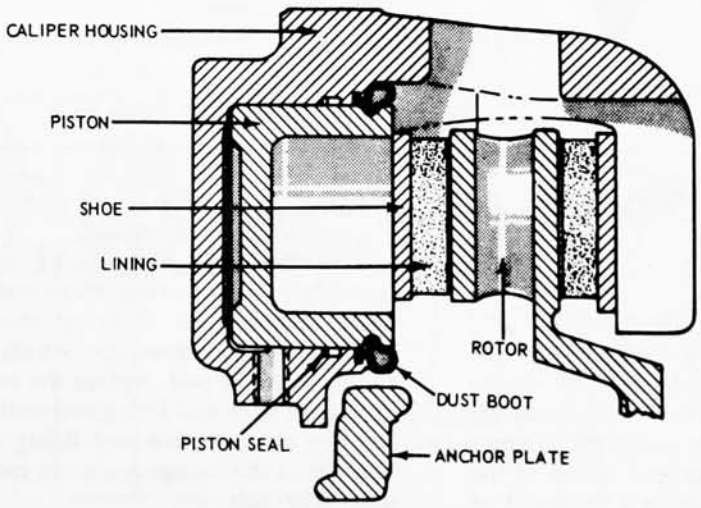

Fig. 2—Caliper Assembly—Sectional View

assembly consists of friction material bonded to a metal plate called the shoe. It is replaced as a unit (Fig. 3).

The cast iron disc is of the ventilated rotor type incorporating forty fins and is attached to, and rotates with the wheel hub. The outside diameter of the rotor is 11¾ inches and the inside diameter is 7¾ inches. This type of design increases cooling area and permits circulation of air through the rotor resulting in more rapid cooling of the brake. A splash shield bolted to the spindle is used primarily to prevent road contaminants from contacting the inboard rotor and lining surfaces. The wheel provides protection for the outboard surface of the rotor.

Fig. 3—Inner Brake Shoe and Lining Assembly

As the brake pedal is depressed, hydraulic pressure from the master cylinder forces the piston out of the bore. The inboard shoe and lining, resting against the piston, is forced against the rotor. When the inboard shoe is against the rotor hydraulic pressure equalizes and moves the entire floating caliper assembly inward. The outboard shoe and lining assembly attached to the floating caliper assembly is thereby forced against the rotor. Hydraulic pressure forcing the inboard shoe and lining outward and the caliper-mounted shoe and lining inward creates a squeezing action against the rotor, effecting braking action.

During braking action the piston seal distorts as the piston moves outward (Fig. 4). When hydraulic pressure is released the seal relaxes and pulls the inboard shoe and lining away from the rotor. When brakes are applied, hydraulic pressure moves the floating caliper, distorting the caliper locating pin insulators. When hydraulic pressure is released, the insulators relax moving the caliper back to its normal position. Since the outboard shoe and lining is attached to the caliper it is moved away from the rotor. In addition, inherent rotor runout will aid in maintaining running clearance between the rotor and the shoe and lining assemblies. Automatic adjustment is accomplished by the piston sliding in the seal outward from the cylinder bores. The piston gradually changes its position relative to the seal as the lining wears and, thus, maintains the correct adjustment location at all times.

When the brakes are in the unapplied position, there is no hydraulic pressure to the calipers because the fluid source at the master cylinder has no residual check valve in the front brake section.

A proportioning valve located between the master cylinder and the rear brake wheel cylinders provides balanced braking action between the front and the rear brakes under a wide range of braking conditions. By regulating the hydraulic pressure applied to the rear wheel cylinders, the valve limits rear braking action when high pressures are required at the front brakes. In this manner, premature rear wheel skid is prevented. **The proportioning valve is serviced as an assembly and is never adjusted or overhauled.**

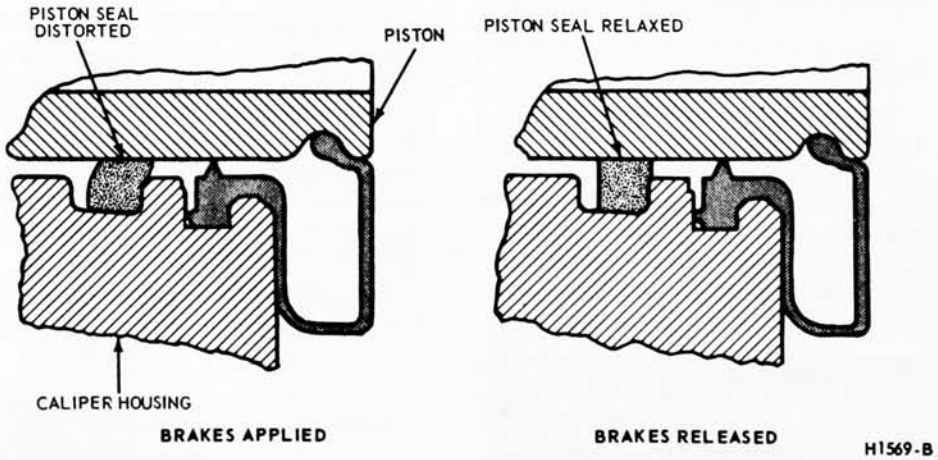

Fig. 4—Function of Piston Seal

2 CLEANING AND INSPECTION

DISC BRAKES

1. Remove the wheel and tire and the shoe and lining assemblies as outlined in Section 3.

2. Make thickness measurements with a micrometer across the thinnest section of the shoe and lining. If the assembly has worn to a thickness of 0.230-inch (shoe and lining together) or 0.030-inch (lining material only) at any one of three measuring locations or if lining shows evidence of contamination which is causing a brake pull, replace the contaminated shoe and lining assemblies. Replace all (4) shoe and lining assemblies if the linings are worn more than .030 inch.

3. Check the caliper to spindle attaching bolts torque. Torque them to specifications, if required.

4. To check rotor runout, first eliminate the wheel bearing end play by tightening the adjusting nut. After tightening the nut, check to see that the rotor can still be rotated.

5. Clamp a dial indicator to the spindle so that the stylus contact the rotor at a point approximately 1 inch

from the outer edge. Rotate the rotor and take an indicator reading. If the reading exceeds 0.002 inch total lateral runout on the indicator, replace or resurface the disc brake rotor. **The following requirement must be met when resurfacing disc brake rotors:**

Rotunda Disc Brake Attachment FRE-2249-2 is the **only approved** tool to be used to refinish the disc brake rotors. The step-by-step resurfacing procedure provided with the tool must be adhered to.

The finished braking surface of the rotor must be flat and parallel within 0.0007 inch; lateral runout must not exceed 0.002 inch total indicator reading, and the surface finish of the braking surface are to be 15-80 micro inches.

6. Check the rotor for scoring. Minor scores can be removed with a fine emery cloth. If the rotor is excessively scored, refinish it as outlined in step 5 or replace the rotor, if required.

7. Visually check the caliper and if leakage is evident, it should be replaced. Any leakage around the dust boot indicates the need for removal and disassembly.

8. Check the brake hoses for signs of cracking, leaks or abrasion. Replace them if necessary.

3 IN-VEHICLE ADJUSTMENTS AND REPAIRS

After any brake service work, obtain a firm brake pedal before moving the vehicle. Riding the brake pedal (common on left foot application) should be avoided when driving the vehicle.

DISC BRAKE SHOE AND LINING REPLACEMENT

DISC BRAKE SERVICE PRECAUTIONS

1. Grease or any other foreign material must be kept off the caliper assembly, surfaces of the rotor and external surfaces of the hub during service operations. Handling of the rotor and caliper assemblies should be done in a way to avoid deformation of the brake rotor and nicking or scratching of brake linings.

2. If the piston is removed for any reason, the piston seal must be replaced.

3. During removal and installation of a wheel assembly, exercise care not to interfere with and damage the caliper splash shield of the bleeder screw fitting.

4. Front wheel bearing end play is critical and must be within specifications.

5. Be sure the vehicle is centered on the hoist before servicing any front end components, to avoid bending or damaging the rotor splash shield on full right or left wheel turns.

6. The proportioning valve should not be disassembled or adjustments attempted on it.

7. The wheel and tire must be removed separately from the brake rotor, unlike drum brakes where the wheel, tire and drum are removed as a unit.

8. The caliper assembly must be removed from the spindle prior to removal of the shoe and lining assemblies.

9. Do not attempt to clean or restore oil or grease soaked brake linings. When contaminated linings are found or if the brake linings are worn more than .030 inch, they must be replaced in complete axle sets.

REMOVAL

Refer to Fig. 5.

1. Remove the wheel and tire from the hub and rotor assembly.

2. Disconnect the flexible hose from the caliper by removing the through

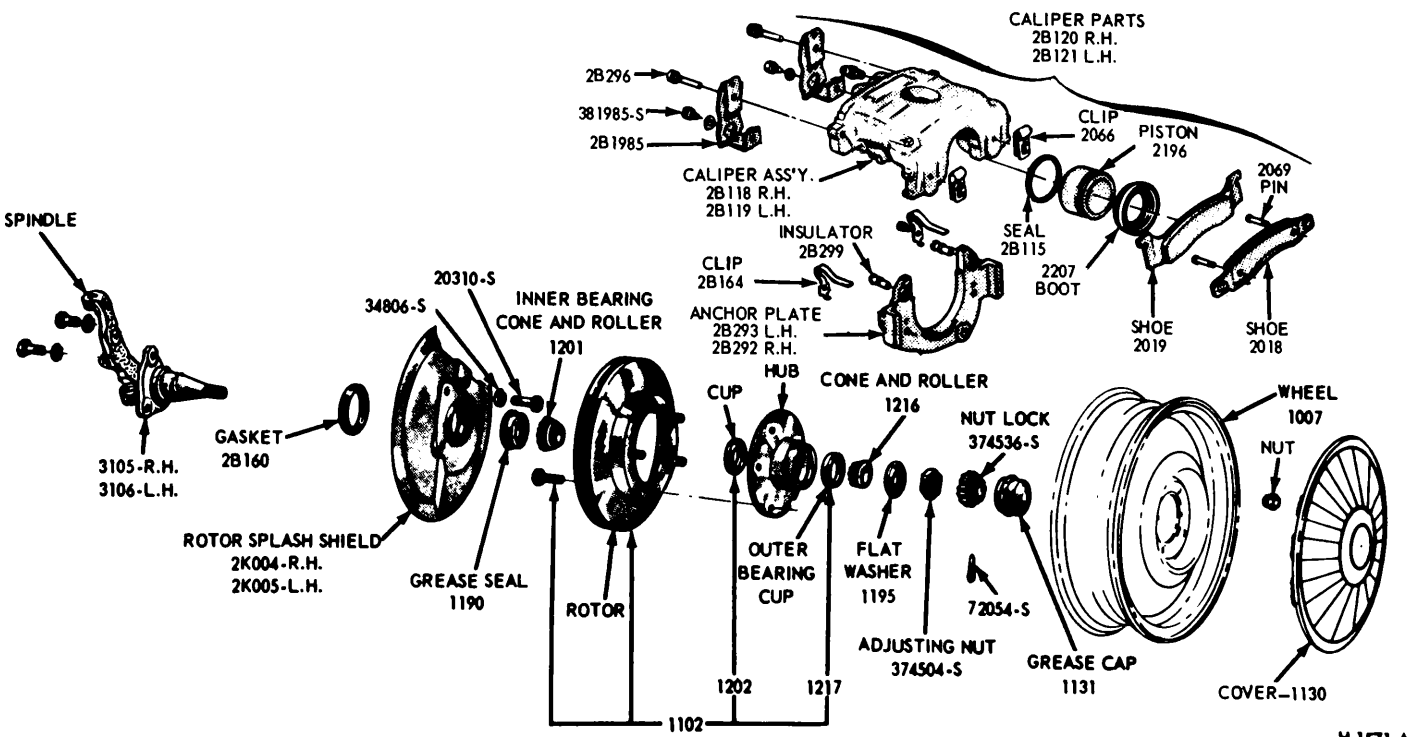

Fig. 5—Disc Brake—Disassembled

bolt from the caliper at the flexible hose connector. Cap the hose to prevent the brake fluid from leaking from the master cylinder.

3. Remove the safety wire from the caliper to spindle attaching bolts, then remove the bolts.

4. Carefully lift the caliper assembly off the hub and rotor.

5. Remove the two outer shoe retaining clips from the retaining pins (Fig. 5).

6. Remove the two retaining pins from the outer shoe, then remove the shoe from the caliper.

7. Slide the inner brake shoe outward until it is free of the hold-down clips, then remove the brake shoe.

8. Remove the caliper locating pins and stabilizer attaching bolts, then remove the stabilizers.

9. Remove the locating pin insulators from the anchor plate and remove the caliper from the anchor plate.

INSTALLATION

Refer to Fig. 5.

1. Install new locating pin insulators in the anchor plate.

2. Position the caliper assembly on the anchor plate.

3. Position the stabilizers and install the caliper locating pins to engage approximately four threads.

If the caliper locating pins are rusted or corroded they should be replaced.

Apply water or isopropyl alcohol (M-8B7-B fluid supplied in the lining kit) to the caliper locating pins before installation. Oil or grease must not be used on the locating pins.

4. Position the outer brake shoe and lining assembly on the caliper with the brake shoe stamped projections fitting into the outboard caliper slots.

5. Insert the two outer brake shoe hold-down pins outward through the brake shoe and caliper and install the spring clips.

6. Install the inner brake shoe and lining assembly with the ears on top of the anchor plate bosses and under the inner brake shoe hold down clips.

7. Install the caliper assembly following the procedure outlined under Disc Brake Caliper Assembly, Installation.

DISC BRAKE CALIPER ASSEMBLY

REMOVAL

1. Remove the front wheel cover. Remove the wheel and tire assembly from the hub and rotor assembly. **Be careful to avoid damage or interference with the caliper splash shield or bleeder screw fitting.**

2. Disconnect the flexible hose from the caliper by removing the through bolt from the caliper at the flexible hose connector. Cap the hose to prevent the brake fluid from leaking from the master cylinder.

3. Remove the safety wire and the two bolts that attach the caliper assembly to the spindle.

4. Lift the caliper assembly off the rotor and place it on the bench.

INSTALLATION

1. Position the caliper assembly on the rotor, and mate the mounting bolt holes in the caliper with those in the spindle. It is necessary to push the caliper piston into the cylinder bore to obtain clearance between the shoe and lining assembly and the rotor when new shoe and lining assemblies are installed.

2. Install the caliper to spindle attaching bolts finger tight and torque them to specification. **The upper bolt must be tightened first.** Install the safety wire on the bolts and twist the wire ends at least five turns. Push the wire ends outboard to prevent interference with the brake hoses.

3. Position the brake hose fitting with a new copper washer on each side of the fitting on the caliper assembly. Install the bolt and torque to specification.

4. Bleed the brake system and centralize the differential valve as outlined in Part 2-1. Check the master cylinder fluid level and add the specified fluid, as required. **Pump the brake pedal several times to actuate the piston seals and to position the shoe and lining assemblies.**

5. With moderate pressure applied to the brake pedal, torque the stabilizer attaching screws and caliper guide pins to specifications.

6. Install the wheel and tire assembly and the wheel cover.

7. Road test the vehicle.

FRONT WHEEL HUB AND ROTOR ASSEMBLY—DISC BRAKES

REMOVAL

1. Remove the wheel and tire from the hub (Fig. 5). **Be careful to avoid damage or interference with the bleeder screw fitting.**

2. Remove the caliper assembly from the spindle and the rotor. If the caliper does not require servicing, it is not necessary to disconnect the brake hose or remove the caliper from the vehicle. Position the caliper out of the way, and support it with a wire to avoid damaging the caliper or stretching the hose. Insert a **clean** cardboard spacer between the linings to prevent the piston from coming out of the cylinder bore while the caliper is removed.

Handle the rotor and caliper assemblies in such a way as to avoid deformation of the rotor and nicking, scratching or contamination of the brake linings.

3. Remove the grease cap from the hub. Remove the cotter pin, nut lock, adjusting nut, and flat washer from the spindle. Remove the outer bearing cone and roller assembly.

4. Remove the hub and rotor assembly from the spindle.

INSTALLATION

1. If the rotor is being replaced, remove the protective coating from the new rotor with carburetor degreaser. Pack a new set of bearings with specified grease (CIAZ 19590-B), and install the inner bearing cone and roller assembly in the inner cup. Pack grease lightly between the lips of a new grease seal and install the seal (Fig. 5).

If the original rotor is being installed, make sure that the grease in the hub is clean and adequate, that the inner bearing and grease seal are lubricated and in good condition, and that the rotor braking surfaces are clean.

2. Install the hub and rotor assembly on the spindle. **Use care to avoid rubbing the grease seal across the spindle threads.**

3. Lubricate and install the outer wheel bearing, washer and adjusting nut.

4. Adjust the wheel bearings to specification, and then install the nut lock, cotter pin, and grease cap. **The wheel bearing adjustment is especially important with disc brakes,**

follow the procedure in Group 3.

5. Mount the caliper assembly on the spindle following the Disc Brake Caliper Assembly Installation Procedure in this section.

DISC BRAKE ROTOR SPLASH SHIELD

REMOVAL

1. Remove the caliper and the hub and rotor assembly as outlined under Removal in the foregoing procedure (it is not necessary to disconnect hydraulic connections).
2. Remove the three bolts that attach the splash shield to the spindle (Fig. 5).
3. Remove and discard the splash shield to spindle gasket.

INSTALLATION

1. If the shield is bent, straighten it out before installation. Position a new splash shield to spindle gasket and the splash shield to the mounting bracket. Install the attaching bolts, nuts, and torque them to specification (Fig. 5).
2. Install the hub and rotor assembly and the caliper as outlined under Installation in the foregoing procedure.

PARKING BRAKE LINKAGE ADJUSTMENT

Check the parking brake cables when the brakes are fully released. If the cables are loose, adjust them as follows:

1. Fully release the parking brake pedal by pushing down the manual release lever.
2. Depress the parking brake pedal approximately 1¼ inches.
3. Raise the vehicle. With the transmission in neutral, turn the adjusting nut forward against the equalizer (Fig. 6) until a moderate drag is felt when turning the rear wheels (approximately 100 lbs of force at the outside diameter of the tire is required to turn the rear wheels).
4. Release the parking brake, and check to make sure that the brake shoes return to the fully released position.
5. Depress the parking brake pedal until it is fully engaged.
6. Release the parking brake again, and check as in step 4.
7. If the rear brakes do not fully release, check the cables for kinks or binds. Free the cables as required.

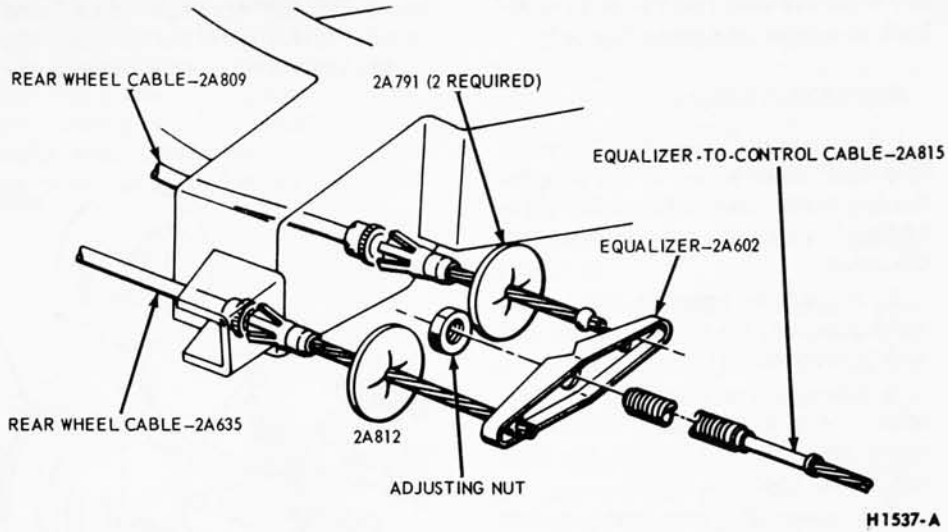

Fig. 6—Parking Brake Linkage

PRESSURE DIFFERENTIAL VALVE ASSEMBLY

REMOVAL

1. Disconnect the brake warning light wire from the pressure differential valve assembly switch (Figs. 7 and 8). **To prevent damage to the brake warning switch wire connector, expand the plastic lugs to allow removal of the shell-wire connector from the switch body.**
2. Loosen the tube nut connecting the primary (front brake) system inlet tube at the top of the pressure differential valve assembly and disconnect the tube.
3. Disconnect the primary system left front brake outlet tube from the top side of the pressure differential valve assembly.
4. Disconnect the primary system right front brake outlet tube from the top side of the differential valve assembly.
5. Disconnect the secondary (rear brake) system inlet tube at the lower side of the pressure differential valve assembly.
6. Disconnect the secondary system rear brake outlet tube from the lower side pressure differential valve assembly.
7. Remove the screw retaining the pressure differential valve assembly to the frame side rail and remove the valve assembly.
8. Place the pressure differential valve assembly and mounting bracket in a vise. Loosen the proportioning valve tube nuts at the differential valve and at the proportioning valve. Remove the proportioning valve from the mounting bracket.
9. If the differential valve is to be replaced, remove the brake warning lamp switch and install the switch in the new differential valve. **The pressure differential valve assembly and the brake warning lamp switch**

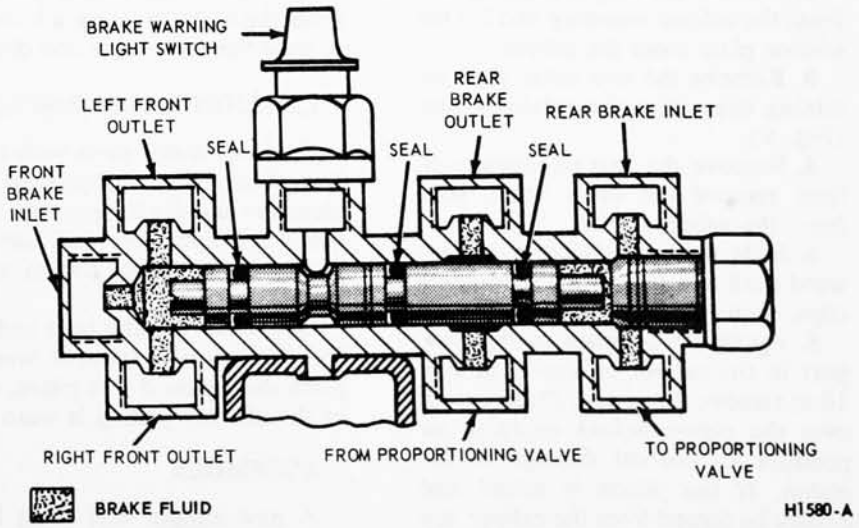

Fig. 7—Pressure Differential Valve

are separate units and each is serviced as a separate assembly only.

INSTALLATION

1. Connect the proportioning valve inlet and outlet tubes to the proportioning valve and differential valve bodies. Tighten the tube nuts to specification.

2. Mount the pressure differential valve assembly on the frame side rail and tighten the attaching screw.

3. Connect the rear brake system inlet tube to the pressure differential valve assembly and tighten the tube nut to the specified torque.

4. Connect the rear brake system outlet tube to the pressure differential valve assembly. Tighten the tube nut to the specified torque.

5. Connect the front brake system inlet tube to the pressure differential valve assembly and tighten the tube nut to the specified torque.

6. Connect the right front brake outlet tube to the pressure differential valve assembly. Tighten the tube nut to the specified torque.

7. Connect the left front brake outlet tube to the pressure differential valve assembly. Tighten the tube nut to the specified torque.

8. Connect the shell - wire connector to the brake warning lamp switch. **Make sure the plastic lugs on the connector hold the connector securely to the switch.**

9. Bleed the brakes and centralize the pressure differential valve.

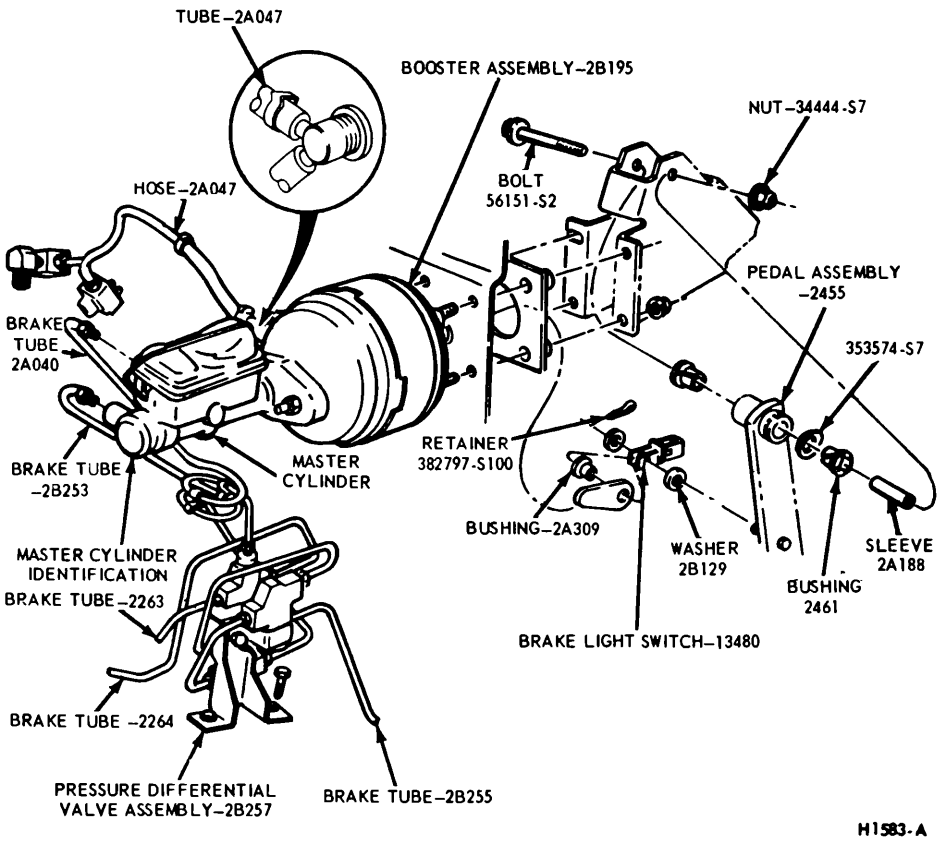

Fig. 8—Brake Control System

4 MAJOR REPAIR OPERATIONS

DISC BRAKE CALIPER

DISASSEMBLY

1. Remove the caliper assembly from the vehicle as outlined in Section 2.

2. Remove the caliper locating pins from the caliper assembly and lift the anchor plate from the caliper.

3. Remove the two outer shoe retaining clips from the retaining pins (Fig. 9).

4. Remove the two retaining pins, then remove the outer brake shoe from the caliper.

5. Slide the inner brake shoe outward until it is free of the hold-down clips, then remove the brake shoe.

6. Apply air pressure to the fluid port in the caliper as shown in Fig. 10 to remove the piston. Place a cloth over the piston before applying air pressure to prevent damage to the piston. If the piston is seized and cannot be forced from the caliper, tap lightly around the piston while applying air pressure. **Care should be taken because the piston can develop considerable force due to pressure build-up.**

7. Remove the dust boot from the caliper assembly.

8. Remove the rubber piston seal from the cylinder using a knife point to raise the piston seal and discard it.

CLEANING AND INSPECTION

Clean all metal parts with alcohol. Use clean, dry, compressed air to clean out and dry the grooves. Be sure that the caliper bore and component parts are completely free of any foreign material.

Check the cylinder bore and piston for damage or excessive wear. Replace the piston if it is pitted, scored, or the chrome plating is worn off.

ASSEMBLY

A new caliper seal must be flat, round and not twisted. Discard any new seals that have been distorted in shipping or storage. **Installation of a distorted seal may result in seal leakage.**

1. Apply a film of clean C6AZ-195-42-A brake fluid to the **new** caliper piston seal and install it in the cylinder bore. Be sure the seal does not become twisted and that it is seated fully in the groove.

2. Install a **new** dust boot by seating the flange squarely in the outer groove of the caliper bore.

3. Coat the outside diameter of the piston with clean C6AZ-19542-A brake fluid and install it in the cylinder bore with the open end of the piston and boot retaining groove facing outward. Spread the dust boot over the piston as the piston is installed using care not to disturb the boot in the caliper groove. Locate the piston squarely in the bore and **apply a firm hand pressure.** If the piston does not fit smoothly into the caliper bore, remove the piston and thoroughly in-

spect the caliper bore and seal installation. Insert the piston again and rotate slowly while applying a steady hand pressure against the piston. **Under no circumstances should the piston be installed using other than a firm hand pressure.** Seat the dust boot in the piston groove and fully seat the piston in the caliper bore.

4. Position the outer brake shoe and lining assembly against the caliper housing legs and install the two brake shoe hold-down pins. Secure the brake shoe hold-down pins with the two pin retainer spring clips.

5. Position the inner brake shoe so that the ears of the shoe rest on the top of the anchor plate bosses and beneath the hold-down clips.

6. Install new caliper locating pin insulators in the anchor plate.

7. Position the caliper on the anchor plate.

8. Clean the caliper locating pins with isopropyl alcohol or water and install them loosely in the anchor plate. **Be sure the locating pins are free of oil, grease or dirt.**

9. Install the caliper on the spindle as outlined under Disc Brake Caliper Assembly Installation, in Section 3.

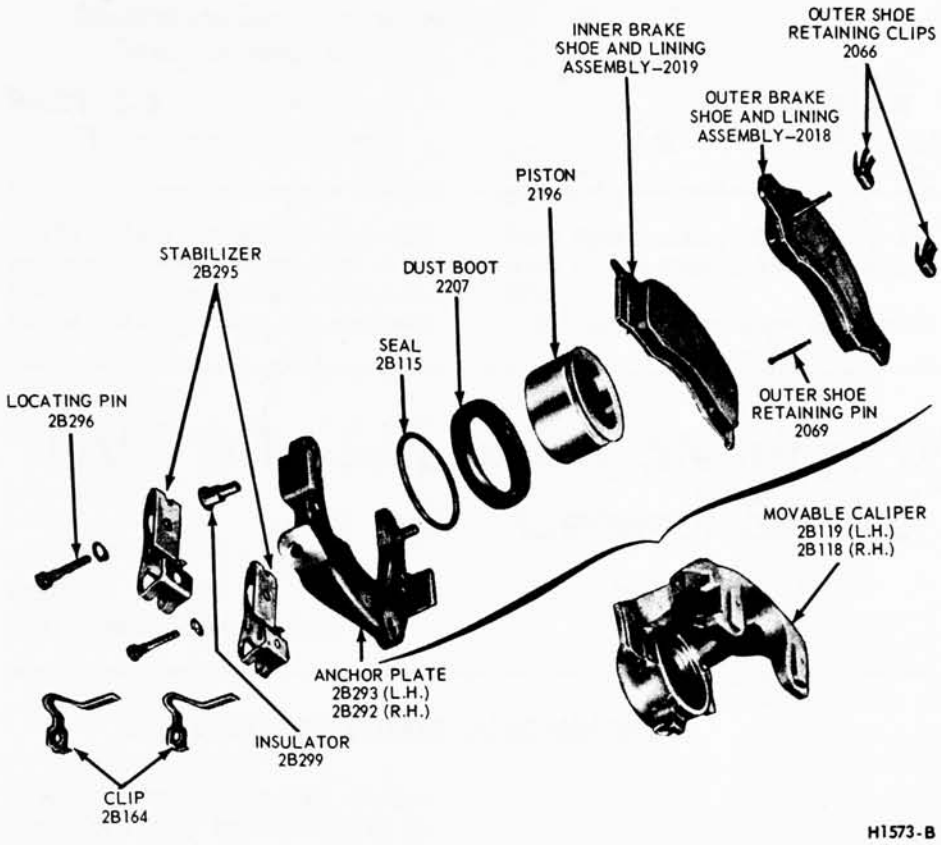

Fig. 9—Caliper Assembly—Disassembled

Fig. 10—Removing Piston from Caliper

Suspension, Steering, Wheels and Tires

GROUP 3

PART 3-1 PAGE
Suspension, Steering, Wheels and Tires—General Service 3-1

PART 3-2
Fixed Steering Column 3-2

PART 3-3 PAGE
Tilt Steering Column 3-4

PART 3-4
Front Wheel Bearing 3-7

The 1968 Thunderbird suspension and steering with the exception of the energy-absorbing steering column removal, installation and alignment and front wheel bearing adjustment is the same as that used in 1967 Thunderbirds.

All service operations other than those that follow should be performed as detailed in Group 3 of the 1967 Thunderbird Shop Manual.

PART 3-1—*Suspension, Steering, Wheels and Tires—General Service*

Section **Page**
1 Steering Column Alignment 3-1

1 STEERING COLUMN ALIGNMENT

A condition of high shift or steering efforts may be experienced on 1968 Thunderbirds caused by improper alignment of the energy absorbing steering column. The following procedures outline the steps necessary to correctly re-align either fixed or tilt columns.

It is recommended that before attempting realignment, the toe plate (column retainer) to dash panel fastener holes be inspected for a binding or misaligned condition.

If the conditions described above could be attributed to this area, file or ream the **dash panel** holes for greater clearance.

The column alignment procedures:

1. Loosen the nuts retaining the toe plate (column retainer) to the dash panel (B in Fig. 1).

2. Loosen to fingertight the bolt and nut located on the toe plate retaining clamp (C in Fig. 1).

3. Remove trim at instrument panel to steering column mounting to expose retaining bolts.

4. Loosen to fingertight the bolts that support the column and bracket against the instrument panel (D in Fig. 1).

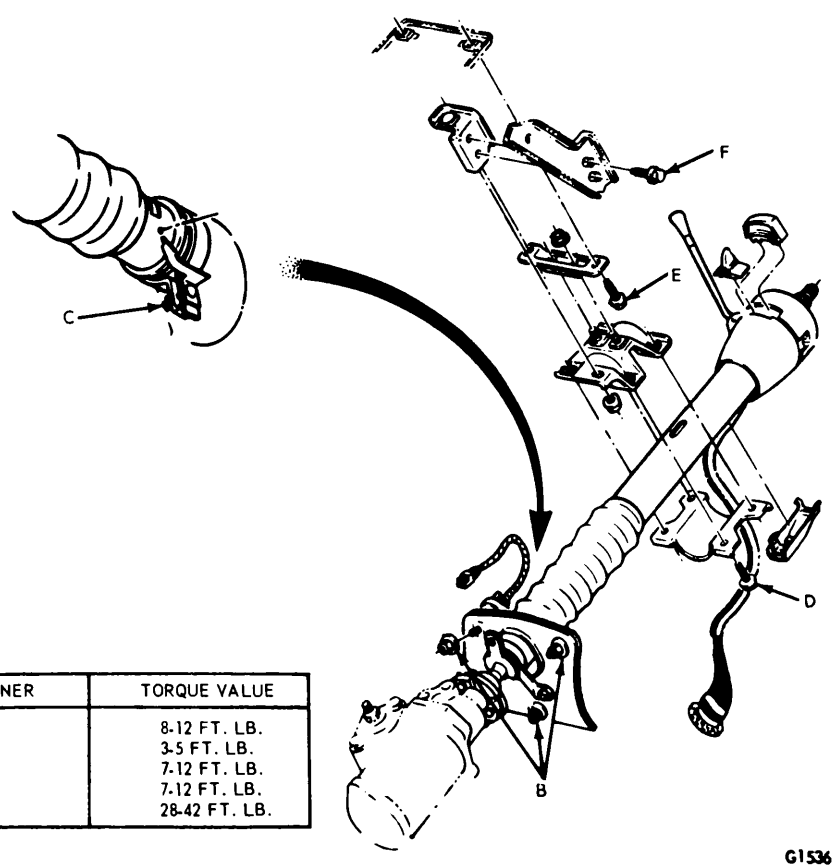

RETAINER	TORQUE VALUE
B	8-12 FT. LB.
C	3-5 FT. LB.
D	7-12 FT. LB.
E	7-12 FT. LB.
F	28-42 FT. LB.

Fig. 1—Steering Column Alignment Locations and Torque Specifications

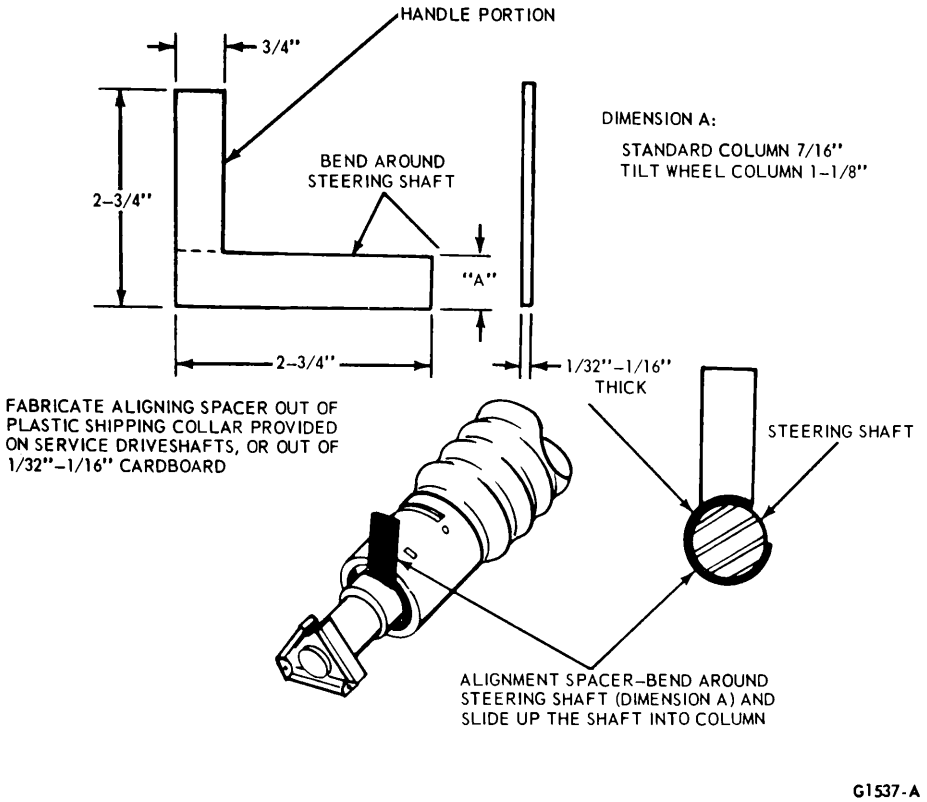

Fig. 2—Aligning Spacer Fabrication and Insertion

5. Loosen to fingertight the bolts or nuts which retain the column brackets to the brake pedal support bracket (E).

6. Loosen to fingertight the bolt which controls lateral adjustment of the steering column (F in Fig. 1).

7. Disconnect the transmission shift rod at the shift tube.

8. Working under the hood, install the aligning spacer (Fig. 2) around the visible portion of the steering shaft and slide it up the shaft into the steering column. It may be necessary to move the shaft back and forth to completely install the spacer.

9. At this point the steering column assembly, being loose, may have dropped toward the steering gear grounding the steering shaft on the steering gear input shaft. To properly establish the steering shaft to steering gear clearance, insert a ⅛ diameter rod or drill through the opening in the upper half of the flex coupling.

10. Tighten to a snug fit (approximately 2-3 ft-lb) the nuts retaining the toe plates to the dash panel (B in Fig. 1).

11. If the aligning spacer cannot be rotated freely, the **dash panel** holes must be filed or reamed for greater travel (as mentioned in the second paragraph at the beginning of this procedure).

12. Tighten all nuts and bolts (noted as C, D and E in Fig. 1) in the passenger compartment to a snug fit (approximately 2-3 ft-lb). Again check aligning spacer for looseness. Perform these tightening operations in **alphabetical** order.

13. Tighten the lateral adjustment bolt (F in Fig. 1) to snug fit. Again check the aligning spacer for looseness.

14. Tighten all bolts and nuts to the proper torque value (listed in Fig. 1) in **alphabetical** order.

15. Remove the steering shaft aligning spacer.

16. Remove the ⅛ diameter rod or drill previously inserted in the flex coupling.

17. Reinstall the trim at the instrument panel to steering column mounting.

PART 3-2—*Fixed Steering Column*

Section	Page	Section	Page
1 Description	3-2	2 Removal and Installation	3-4

1 DESCRIPTION

The standard, fixed steering column is similar to that used in previous models except as follows:

The steering column is of the collapsible type to lessen the possibility of injury to the driver of the vehicle should he become involved in an accident. The lower end of the steering column tube at the bellows area (Fig. 1) will collapse approximately six inches upon an impact of **1800** lbs.

The shift tube and the steering shaft are provided with nylon dowels and will shear and allow them to collapse in proportion to the shift tube upon impact.

Once the steering column has been collapsed, a complete new column must be installed.

The turn signal switch control lever has a neutral (cancel On-Off) position from which the lever can be moved upward to indicate right turns, downward to indicate left turns. As the turn signal control lever is moved slightly up or down when changing lanes, contact is made in the turn signal switch actuating the indicating system prior to reaching detent for full turn self-cancelling. The lever is held in this position and released when lane changing is completed, returning the lever to neutral position.

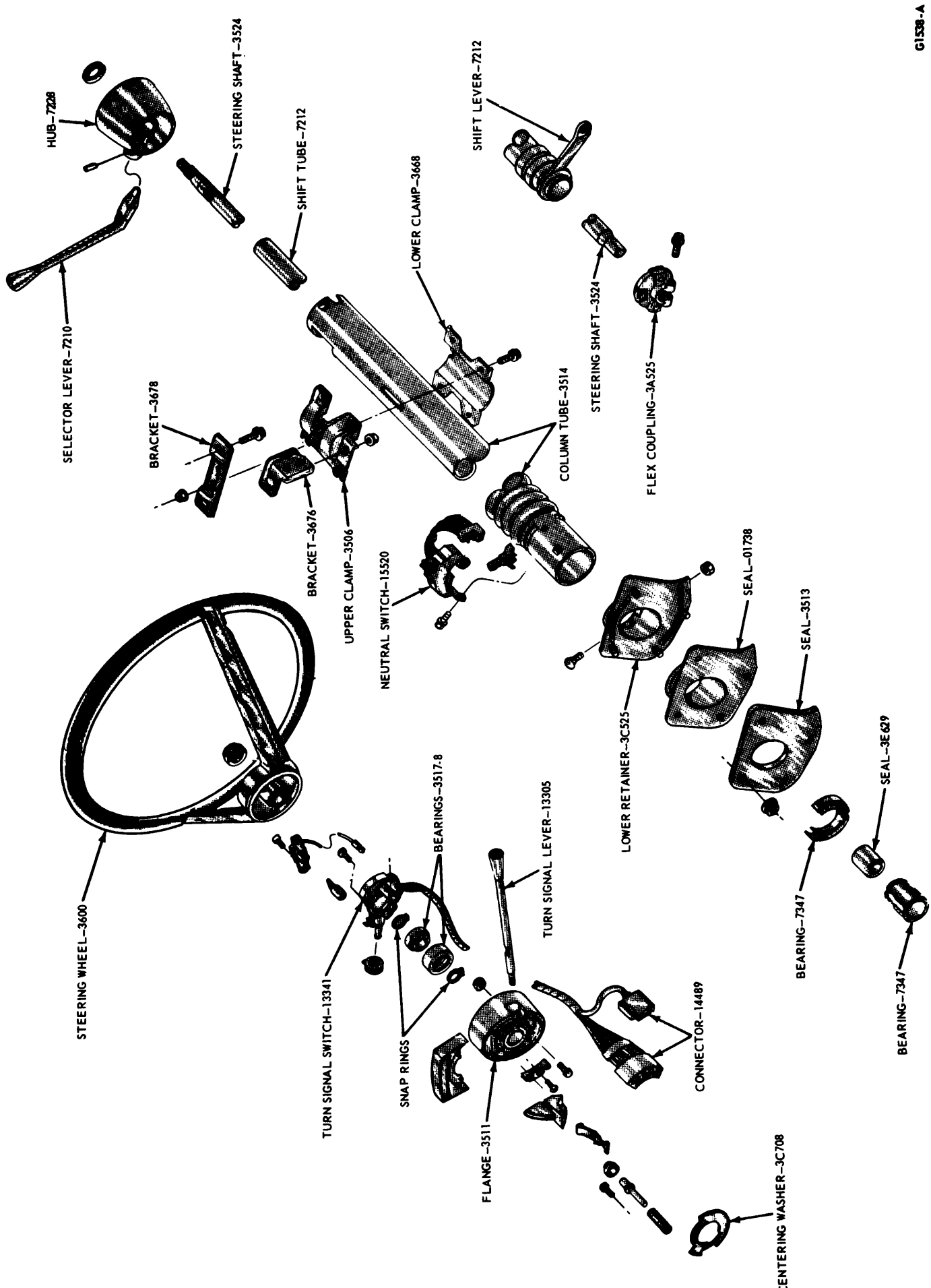

Fig. 1—Fixed Steering Column Disassembled

The full travel of the lever to detent is for a complete left or right turn and automatically cancels on return of the steering wheel to straight-ahead position.

An emergency warning flasher system is integrated with the turn signal switch system. A control knob is located on the right side of the column just below the steering wheel and opposite the turn signal control lever. The emergency warning flasher system is ON when the control knob is pushed in and OFF when the knob is pulled out. When the system is ON the parking lights, stop lights and instrument panel turn indicating lights all flash simultaneously.

The flex coupling incorporates a large and a small drive lug so that it may only be assembled in one position.

The neutral start switch is mounted on the steering column tube below the instrument panel and should be adjusted as detailed in Group 7 of this manual. Procedures for servicing the back-up light switch and turn signal switch are detailed in Group 15 of this manual.

2 REMOVAL AND INSTALLATION

REMOVAL

1. Remove the instrument panel lower outer finish panel, instrument panel steering column plate and cover.
2. Disconnect the battery cable from the negative post.
3. Disconnect the turn signal switch wires at the connector.
4. Disconnect the neutral start switch wires and back-up light switch wires from the switches.
5. Disconnect the transmission control rod from the lever at the lower end of the column.
6. Remove the bolt that secures the flex coupling to the steering gear (Fig. 1).
7. Remove the four screws that secure the column retainer to the dash panel.
8. While supporting the steering column, remove the four bolts that secure the lower clamp to the upper clamp.
9. Remove the clamp from the steering column.
10. Lift the steering column and wheel from the vehicle.

INSTALLATION

1. Position the steering column in the vehicle. Make certain that the wheels are in the straight ahead position and that the steering wheel spokes are in a horizontal position when the flex coupling engages the input shaft splines.
2. Place the lower clamp on the column and install but do not tighten the four attaching bolts.
3. Install the column retainer to the dash panel (Fig. 1). Do not tighten the five attaching screws. Position the clamp to center the steering shaft in the steering column tube, then tighten the attaching screws. Aligning procedures are detailed in Part 3-1.
4. Tighten the clamp-to-instrument panel attaching screws.
5. Install and tighten the flex coupling-to-steering gear attaching bolt.
6. Connect and adjust the transmission control rod.
7. Connect the starter neutral switch and back-up light switch wires to their respective terminals.
8. Connect the turn signal switch wires.
9. Connect the negative battery cable to the battery.
10. Install the instrument panel steering column plate and cover and the instrument panel lower outer finish panel.

PART 3-3—*Tilt Steering Column*

Section	Page	Section	Page
1 Description	3-4	2 Removal and Installation	3-6

1 DESCRIPTION

The optional tilt steering column features nine driving positions (four up and four down from a center position) and a tilt-away position that is automatically accomplished when the ignition key is turned to the OFF position and the left door is opened. This completes an electrical circuit through the left door courtesy light switch and an electrically operated vacuum release valve mounted on the lower edge of the instrument panel approximatly eight inches to the right of the steering column. The vacuum release valve is connected to a vacuum reservoir located on the right fender apron below the battery tray in the engine compartment and to a vacuum motor mounted on the same bracket as the valve on the instrument panel (Fig. 1). Each component of the system is interconnected by a rubber hose. When the vacuum release valve is energized electrically, it opens a valve and allows reservoir vacuum to act on the vacuum motor diaphragm to pull the locking pawl out of the lower flange at the upper end of the column. Spring tension then moves the steering wheel upward and to the right at approximately a 45 degree angle (tilt-away position) at the steering shaft universal joint. The column will remain in the tilt-away position until the driver manually moves the column to the drive position after the left door has been closed.

The column will not move out of

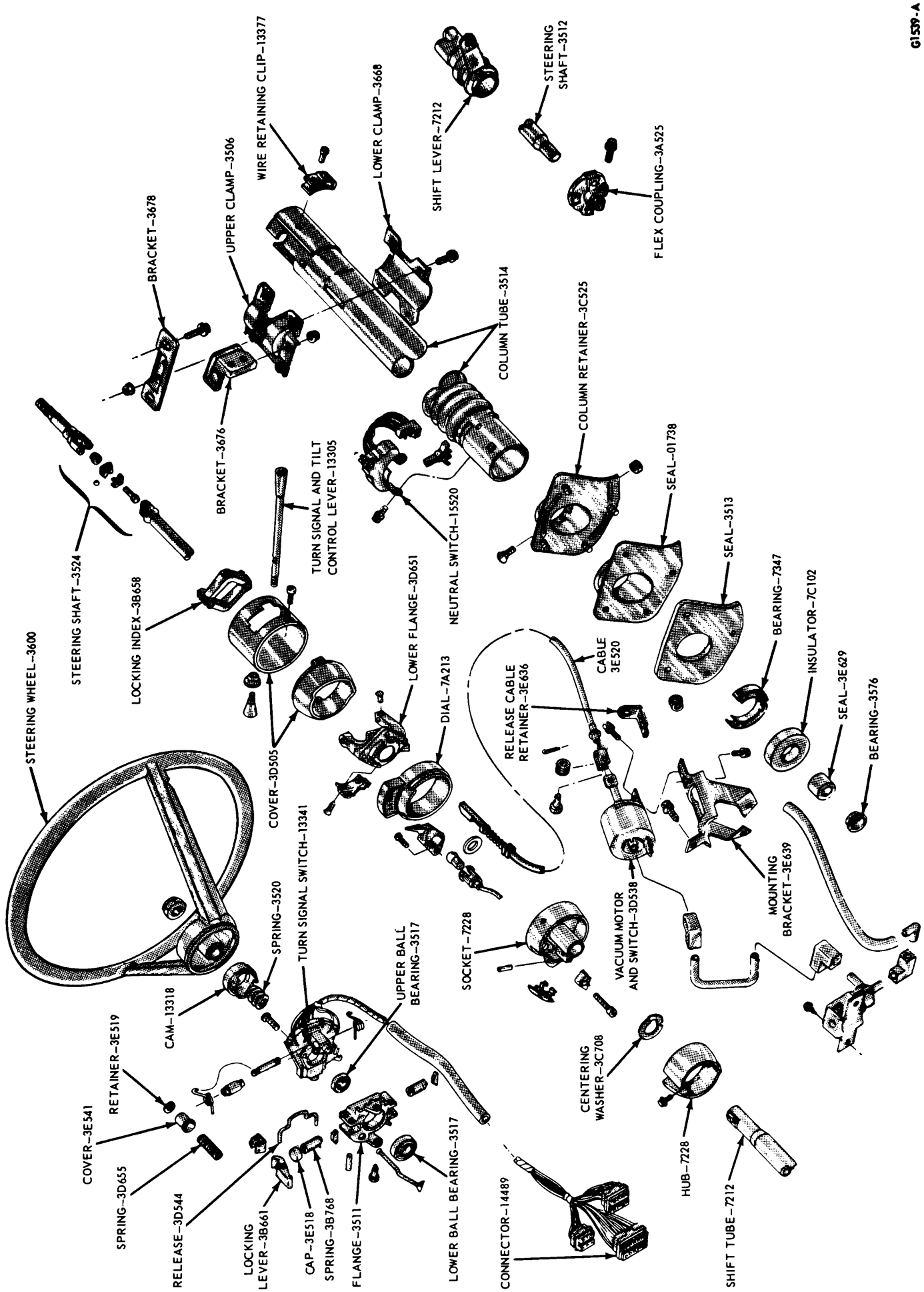

Fig. 1—Tilt Steering Column Disassembled

the driving position until the key is turned to the OFF position and the left door is opened, either operation first as long as both operations are performed.

Changing the column and steering wheel from one driving position to another can be made at any time by depressing the turn indicator control lever and holding it while selecting the desired driving position for the steering wheel. This releases the spring loaded steering column locking lever from the steering column locking index. The column and wheel are locked in position when the turn signal control lever is allowed to return rearward, with spring tension, to its neutral position. This indexes the lug on the steering column locking lever with the closest tooth on the locking index for the selected steering wheel position.

The column also features a turn signal switch with a lane-changer position, turn indicating position and emergency warning flasher control knob.

A starter safety switch located in the vacuum motor prevents the engine from being started while the steering wheel is in the tilt-away position. The starter safety switch is actuated by the vacuum motor. When the steering wheel is placed in the drive position, the vacuum motor piston closes the switch.

The vacuum reservoir has a capacity to operate (cycle) the steering column for approximately three times after the engine has been shut down.

The turn signal switch control lever has a neutral (cancel On-Off) position from which the lever can be moved upward to indicate right turns, downward to indicate left turns and forward to release the steering column lock when adjusting the steering wheel to a desired driving position. As the turn signal control lever is moved slightly up or down when changing lanes, contact is made in the turn signal switch actuating the indicating system prior to reaching detent for full turn self-cancelling. The lever is held in this position and released when lane changing is completed, returning the lever to neutral position. The full travel of the lever to detent is for a complete left or right turn and automatically cancels on return of the steering wheel to straight-ahead position.

An emergency warning flasher system is integrated with the turn signal switch system. A control knob is located on the right side of the column just below the steering wheel and opposite the turn signal control lever. The emergency warning flasher system is ON when the control knob is pushed in and OFF when the knob is pulled out. When the system is ON the parking lights, stop lights and instrument panel turn indicating lights all flash simultaneously.

The steering column is of the collapsible type to lessen the possibility of injury to the driver of the vehicle should he become involved in an accident. The lower end of the steering column tube at the bellows area (Fig. 1) will collapse approximately six inches upon an impact of **1800** lbs.

The shift tube and the steering shaft are provided with nylon dowels and will shear and allow them to collapse in proportion to the shift tube upon impact.

Once the steering column has been collapsed, a complete new column (less undamaged tilt head components) must be installed along with mounting brackets which will also shear away during impact.

When replacing the tilt head mechanism, it is mandatory to replace the attaching bolts with new bolts. Attaching bolts, removed for any reason, must be replaced.

2 REMOVAL AND INSTALLATION

REMOVAL

1. Remove the instrument panel lower outer finish panel, instrument panel steering column plate and cover.
2. Disconnect the negative cable from the battery.
3. Remove the bolt that attaches the flexible coupling to the steering shaft.
4. Disconnect the shift rod from the lever at the lower end of the column.
5. Remove the four screws that attach the column retainer to the dash panel.
6. Working from the underside of the instrument panel disconnect the steering column tilt-control cable from the vacuum motor and mounting bracket (Fig. 1).
7. Disconnect the turn signal switch, and emergency flasher wires at the connectors. Disconnect the wires from the neutral start switch.
8. While supporting the steering column, remove the four bolts that attach the lower clamp to the upper clamp (Fig. 1). Lift the column from the vehicle.

INSTALLATION

1. Position the column in the vehicle making sure that the steering shaft engages the flex coupling.
2. Install the column retainer-to-dash panel attaching screws, but do not tighten them.
3. Install the lower clamp and the attaching nuts. Tighten the nuts fingertight.
4. Move the lower flange as required to center the steering shaft in the tube. Aligning procedures are detailed in Part 3-1. Tighten the lower flange attaching nuts when the shaft is centered.
5. Connect the shift rod to the shift lever at the lower end of the column.
6. Install and tighten the flex coupling attaching bolt.
7. Tighten the instrument panel-to-clamp attaching nuts.
8. Connect the turn signal and emergency flasher switch wires at the multiple connectors. Connect the wires to the neutral start switch. Adjustments for the neutral start switch are detailed in Group 7 of this manual.
9. Connect the tilt-column control cable to the release cable retainer and vacuum motor. To remove cable slack, loosen the bracket attaching screw and pull it slightly toward the column, then tighten the screw. If difficulty in adjusting this control is experienced, the retainer slot may be filed to gain additional travel.
10. Install the instrument panel steering column plate and cover and the instrument panel lower outer finish panel.
11. Connect the negative cable to the battery.
12. Start the engine and check the operation of the steering column and switches.

PART 3-4—*Front Wheel Bearing*

Section	Page
1 Adjustment	3-7

1 ADJUSTMENT

The front wheel bearings should be adjusted if the wheel is loose on the spindle or if the wheel does not rotate freely. The following procedures will bring the bearing adjustment to specification.

1. Raise the vehicle until the wheel and tire clear the floor.

2. Pry off the wheel cover and remove the grease cap (Fig. 1) from the hub.

3. Wipe the excess grease from the end of the spindle, and remove the adjusting nut cotter pin and nut lock.

4. Loosen the bearing adjusting nut three turns. Then, rock the wheel, hub, and rotor assembly in and out several times to push the shoe and linings away from the rotor.

5. While rotating the wheel hub, and rotor assembly, torque the adjusting nut 17-25 ft-lbs to seat the bearings (Fig. 2).

6. Back the adjusting nut off one half turn. Then, retighten the adjusting nut to 10-15 in-lbs with a torque wrench or fingertight.

7. Locate the nut lock on the adjusting nut so that the castellations on the lock are aligned with the cotter pin hole in the spindle.

8. Install a new cotter pin, and bend the ends of the cotter pin around the castellated flange of the nut lock.

9. Check the front wheel rotation. If the wheel rotates properly, install the grease cap and the hub cap or wheel cover. If the wheel still rotates roughly or noisily, clean or replace the bearings and cups as required.

10. Before driving the vehicle, pump the brake pedal several times to obtain normal brake lining to rotor clearance and restore normal brake pedal travel.

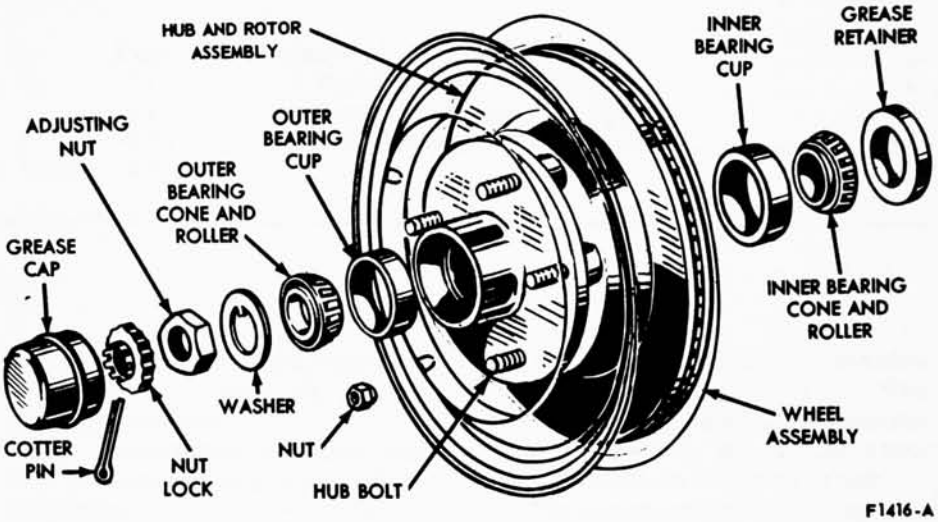

Fig. 1—Front Hub and Rotor Bearing and Grease Retainer Disc Brakes

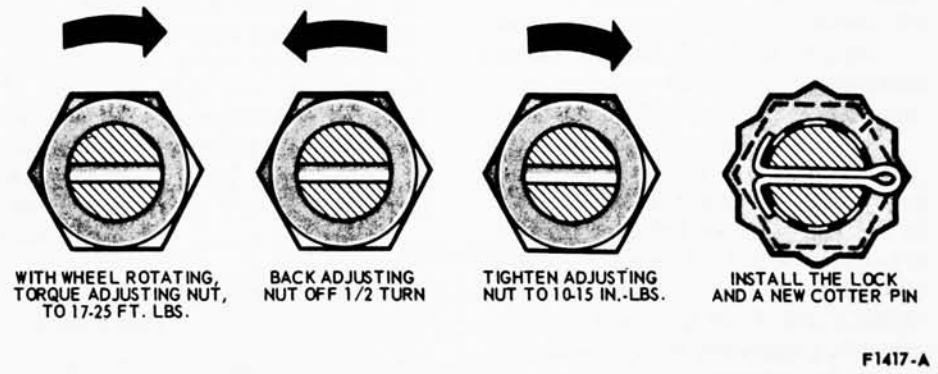

Fig. 2—Front Wheel Bearing Adjustment